KHG714050311

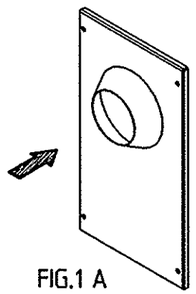

FIG.1 A

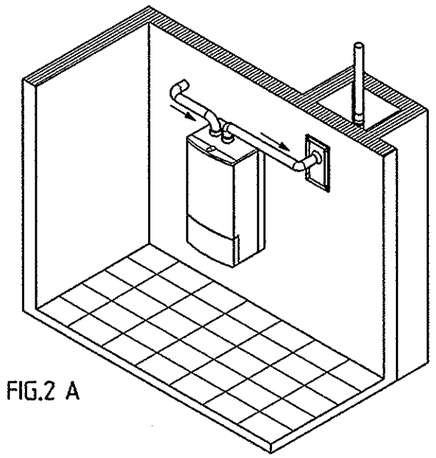

FIG.2 A

KHG714050411

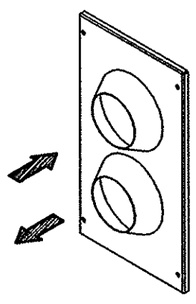

FIG.1 B

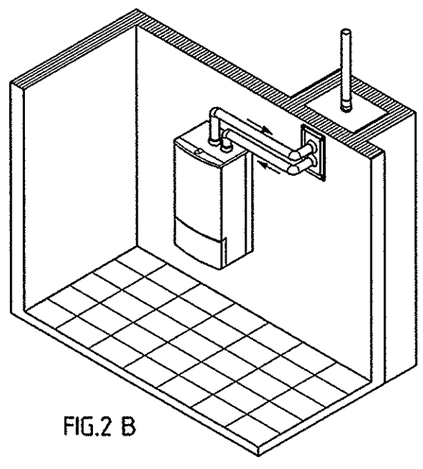

FIG.2 B

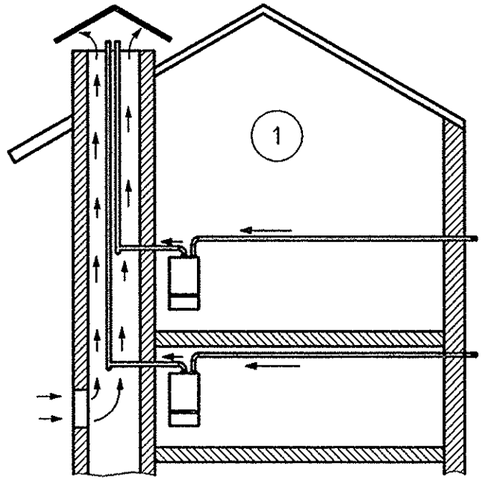

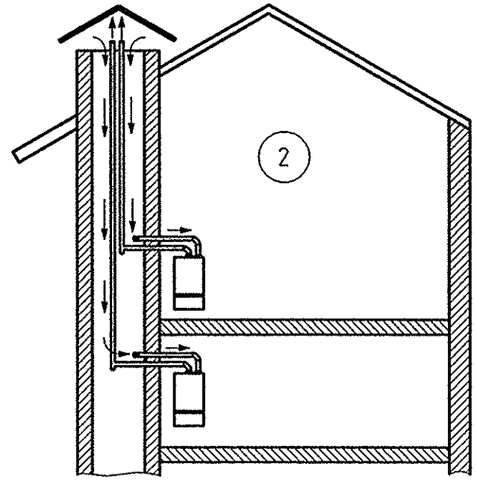

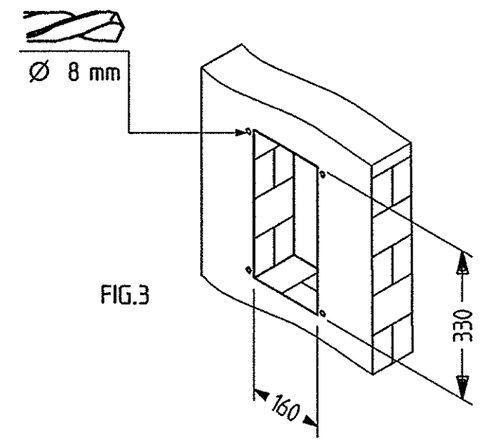

FIG.3

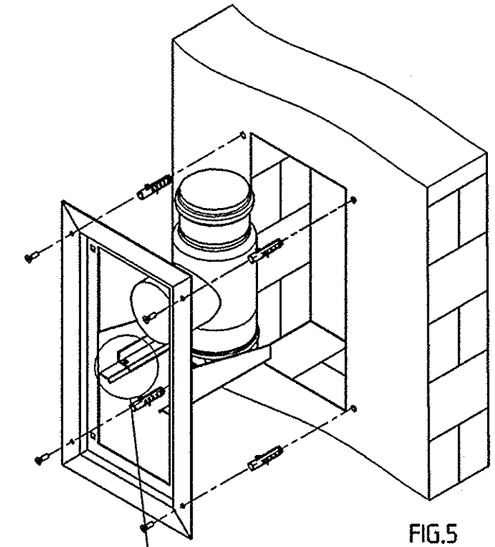

FIG.5

KHG714032810

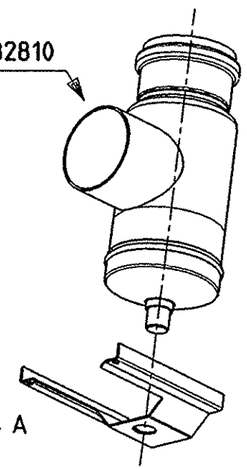

FIG.4 A

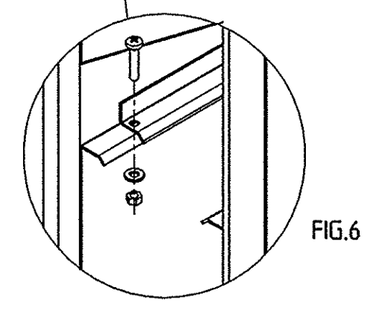

FIG.6

KHG714054710

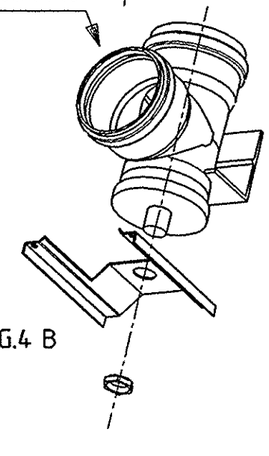

FIG.4 B

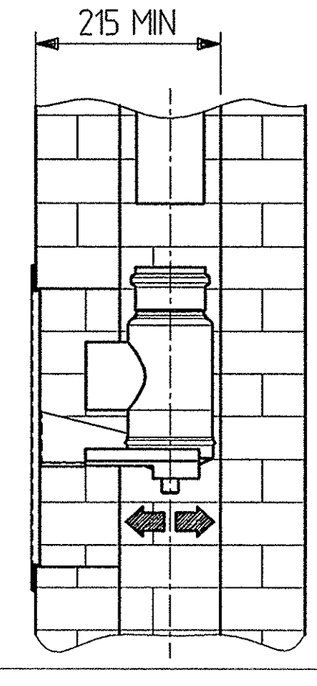

FIG.7

920.600.2