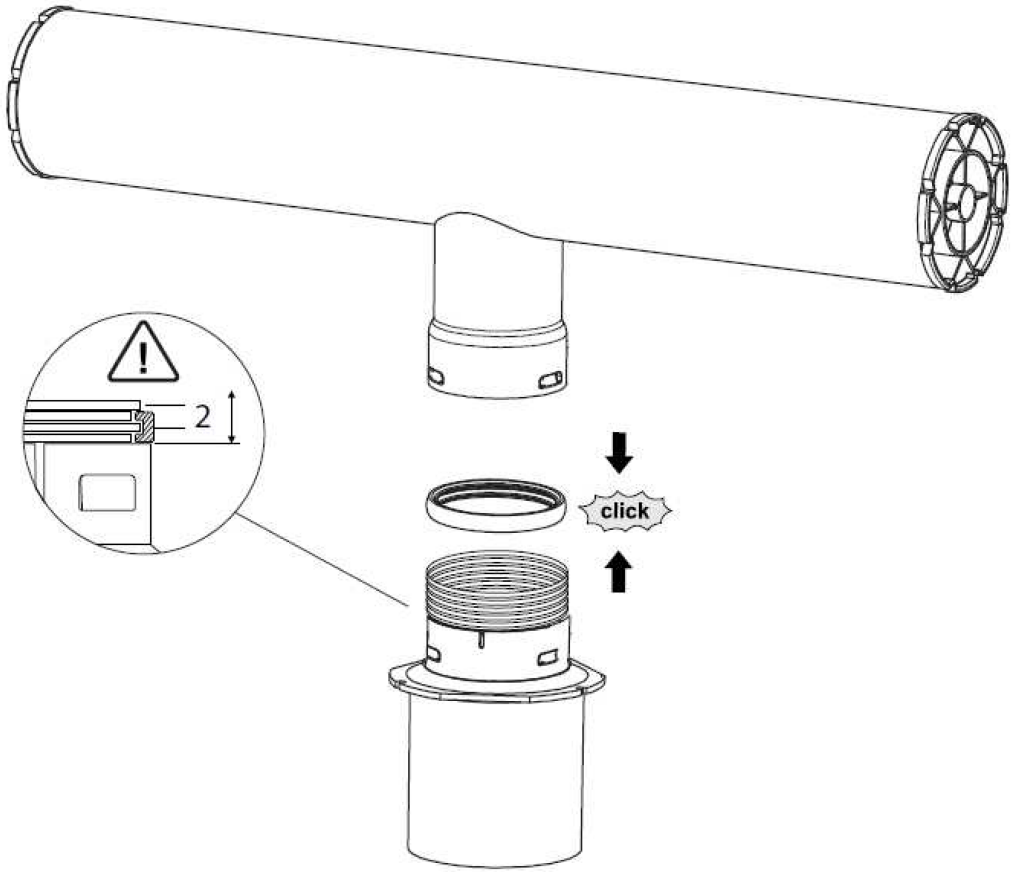
2
click

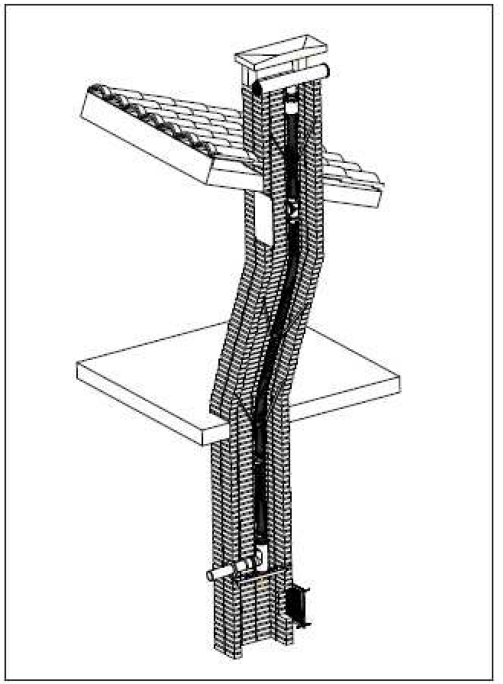

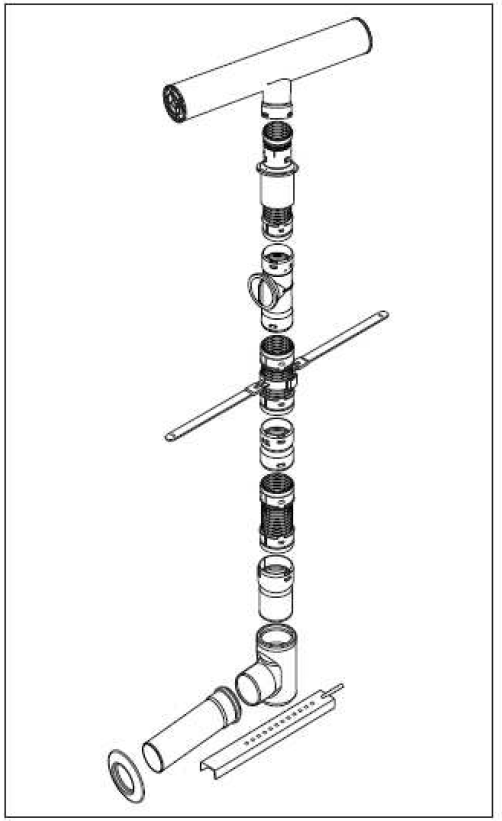

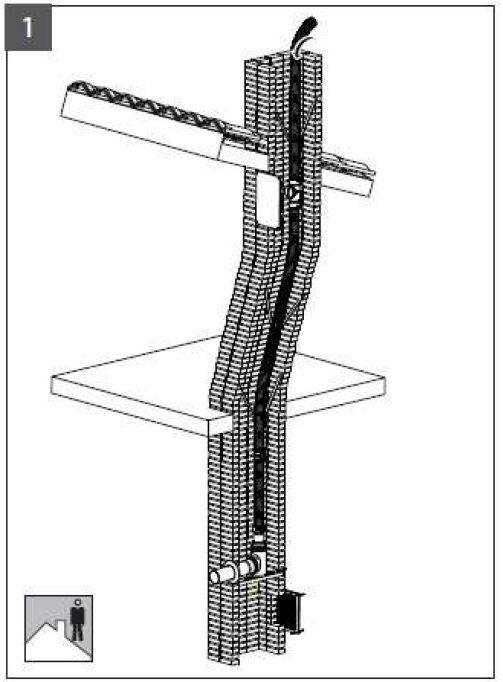
1

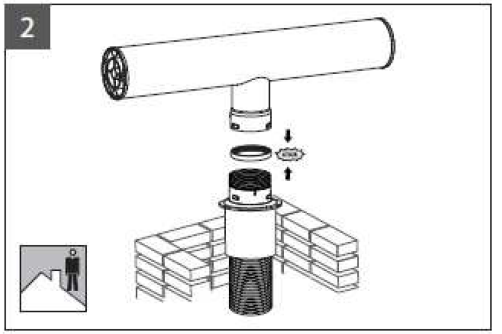
2

D
r>3D
r

< 45°

0° C