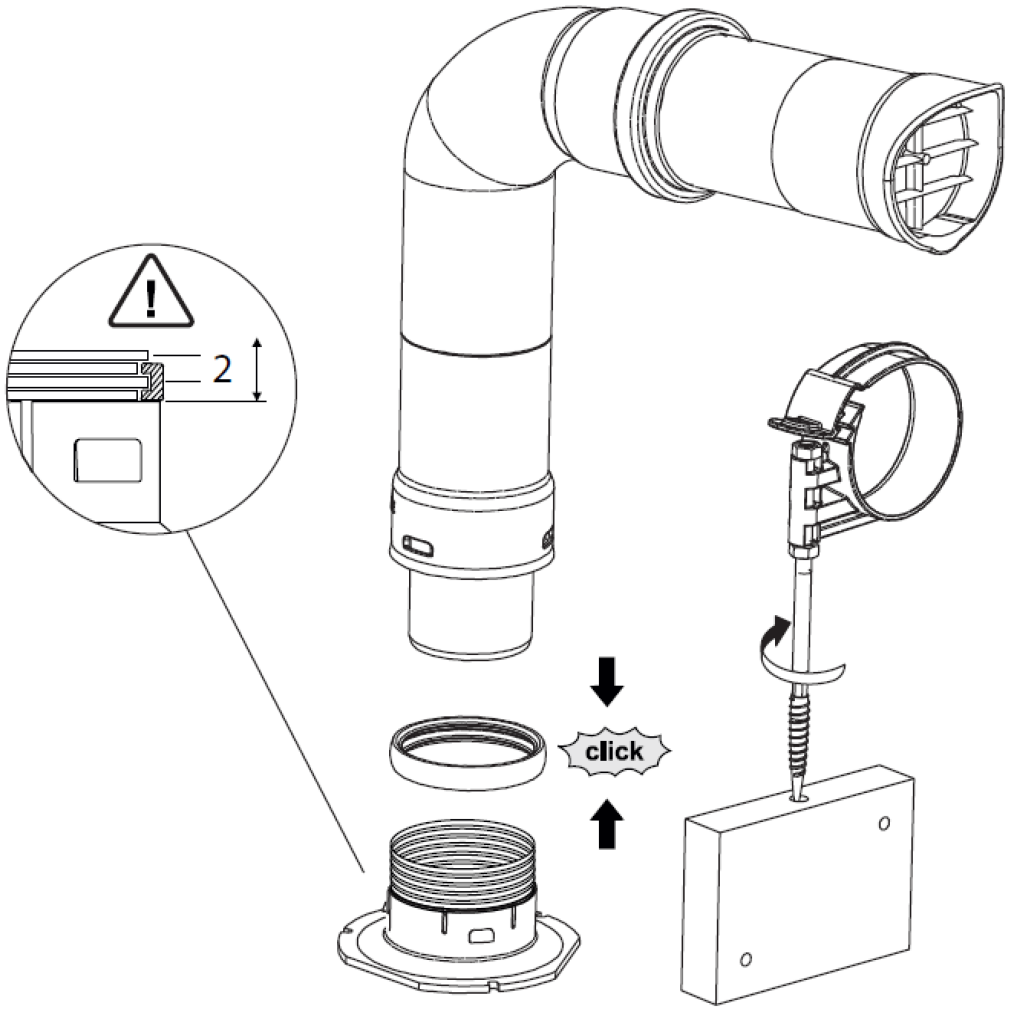
2
click

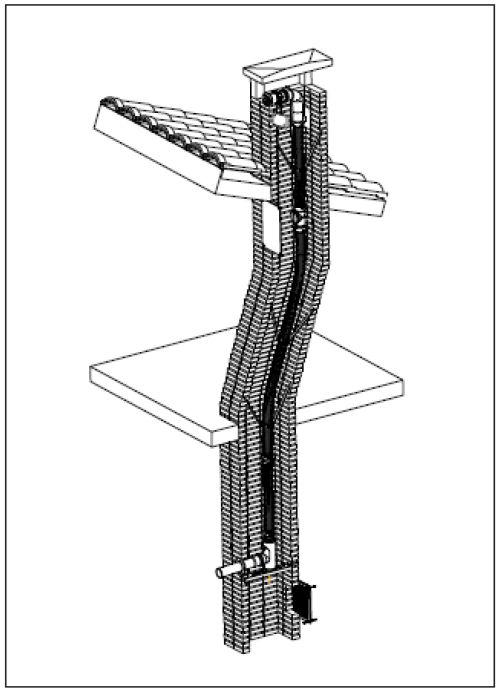

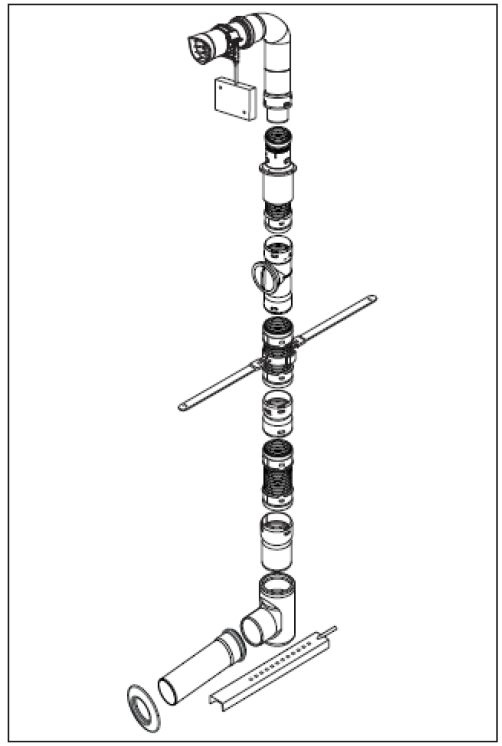

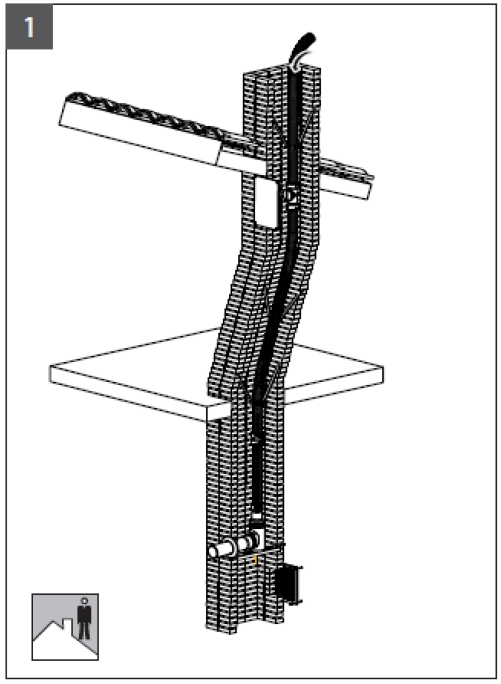
1

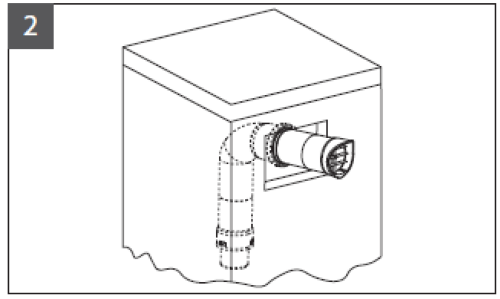
2

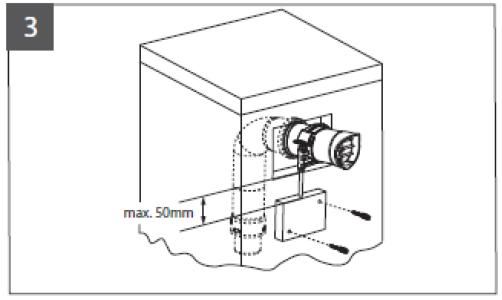
3
max. 50mm

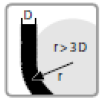
D
r>3D
r

≤45°

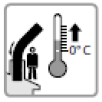
0°C