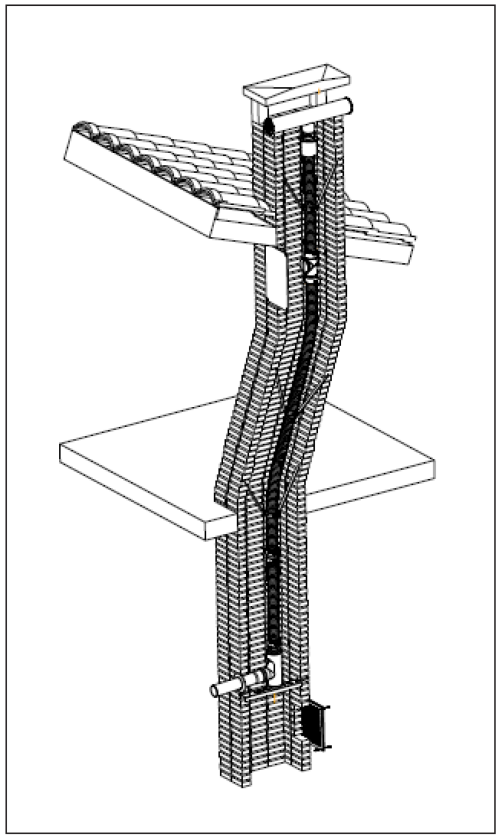

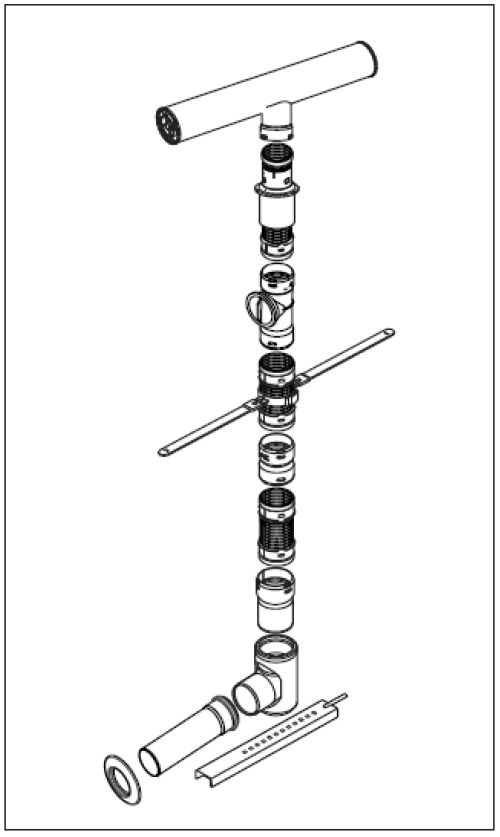

3

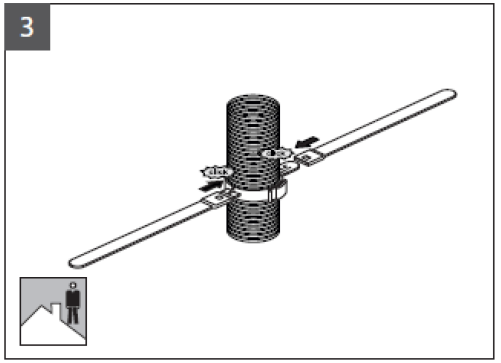
click

5

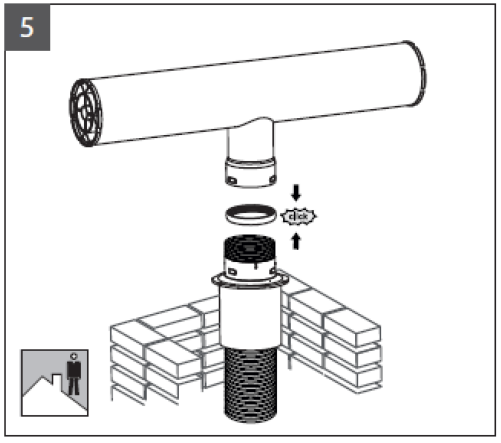
click

4

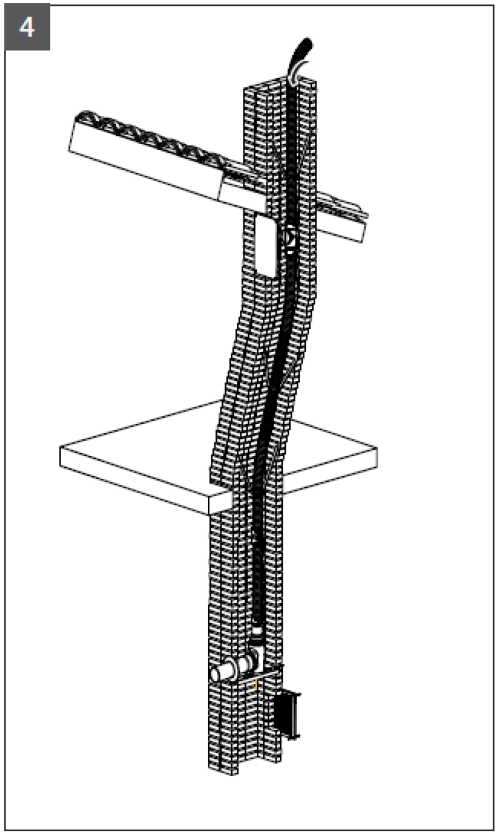

1

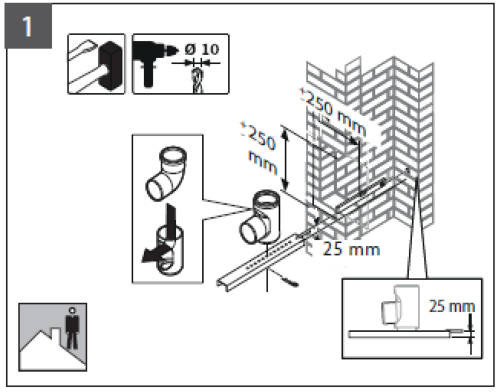
Ø 10
250 mm
250 mm
25 mm
25 mm

2

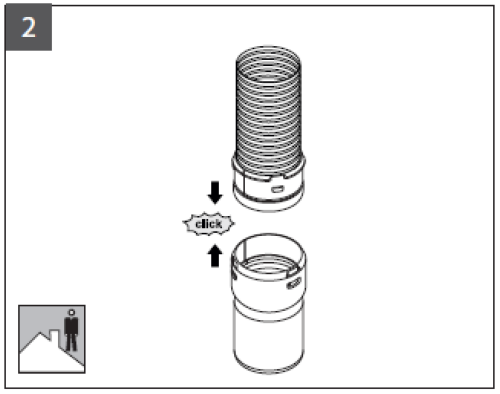
click

6

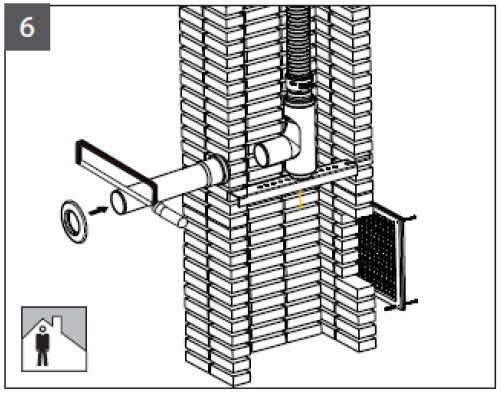

7

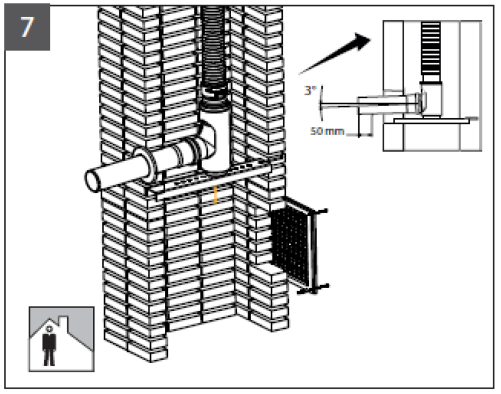
3°
50 mm

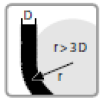
D
r>3D
r

< 45°

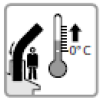
0°C